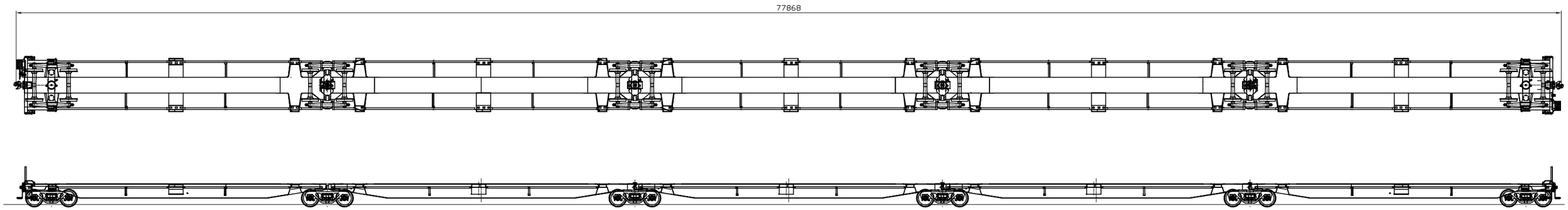

1 ARRANGEMENT

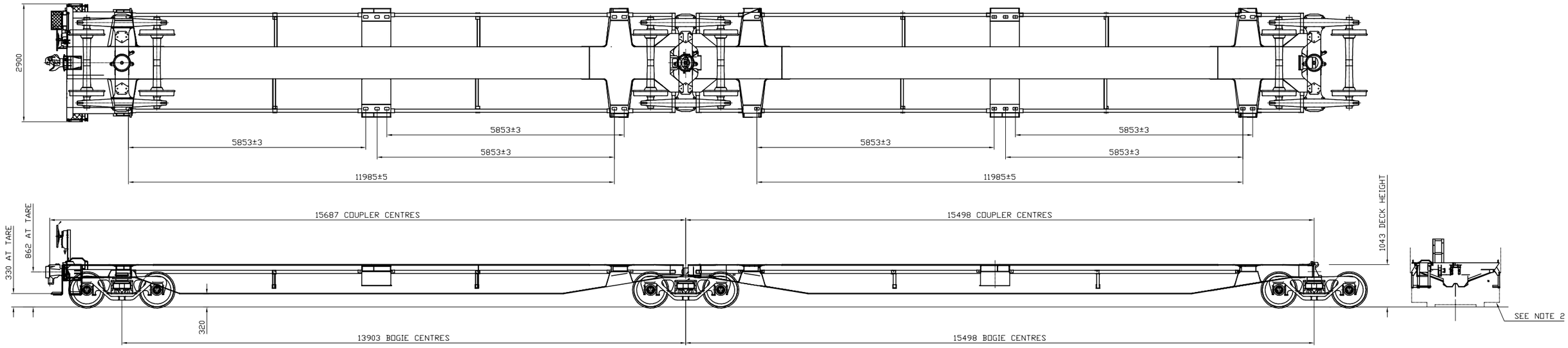

15	ELECTRICAL DIAGRAM	1	REFER TO DRG. A0.94008
14	ELECTRICAL ARRG'T	1	REFER TO DRG A0/W1-381 IT.1
13	LETTERING AND MARKING DIAGRAM	1	REFER TO DRG. A0/W8-86 IT.1
12	BOGIE R/H	6	AAR 6"x11"JNL ø840 WHEELS
11			
10	BOGIE PIN	6	ø45x400 RND BAR AS3679-250
9	SIDEBEARER ASSY	2	REFER TO DRG. A0/W3-21 IT.4
8	SIDEBEARER ASSY - ARTIC ENDS	4	REFER TO DRG. A0/W3-21 IT.2
7	AIR BRAKE ARRG'T (BOGIE)	6	REFER TO DRG. A0/W4-160
6	HANDBRAKE ARRANGEMENT	1	REFER TO DRG. A0/W4-153 IT.1
5	AIR BRAKE ARRG'T (PLATFORM)	1	REFER TO DRG. A0/W4-154 IT.1
4	INTERMEDIATE PLATFORM	3	REFER TO DRG. A0/W1-330 IT.1
3	END PLATFORM (FEMALE)	1	REFER TO DRG. A0/W1-329 IT.20
2	END PLATFORM (MALE)	1	REFER TO DRG. A0/W1-329 IT.1
1	ARRANGEMENT	-	ITEMS 2-15
		WAGON	

aNOTE:

1. FOR LETTERING AND MARKING DIAGRAM REFER TO DRG A0/W8-91.
2. MAXIMUM ROLLINGSTOCK OUTLINE REFER TO ROA DIAGRAM 18.3 (PLATE C)

				A		27/5/94	IT.9 DRG No. REVISED - A0/W3-21 IT.16 TO IT.4	DJP		REQY 1003	

Scale
Drawn
Designed
Checked
Reference
Date

Checklist No
R.M.Dick 5/5/94
Mechanical Services Design Engineer
H.Wroniak 6/5/94
Design Services Manager

AN rail Australian National

NATIONAL RAIL CONTRACT 1249
5-Pack 48' Skeletal
GENERAL ARRG'T

A
A1. W1-328
Sheet No. 1 of 1
©